ERSATZTEILE RAD-50_60_70PPA

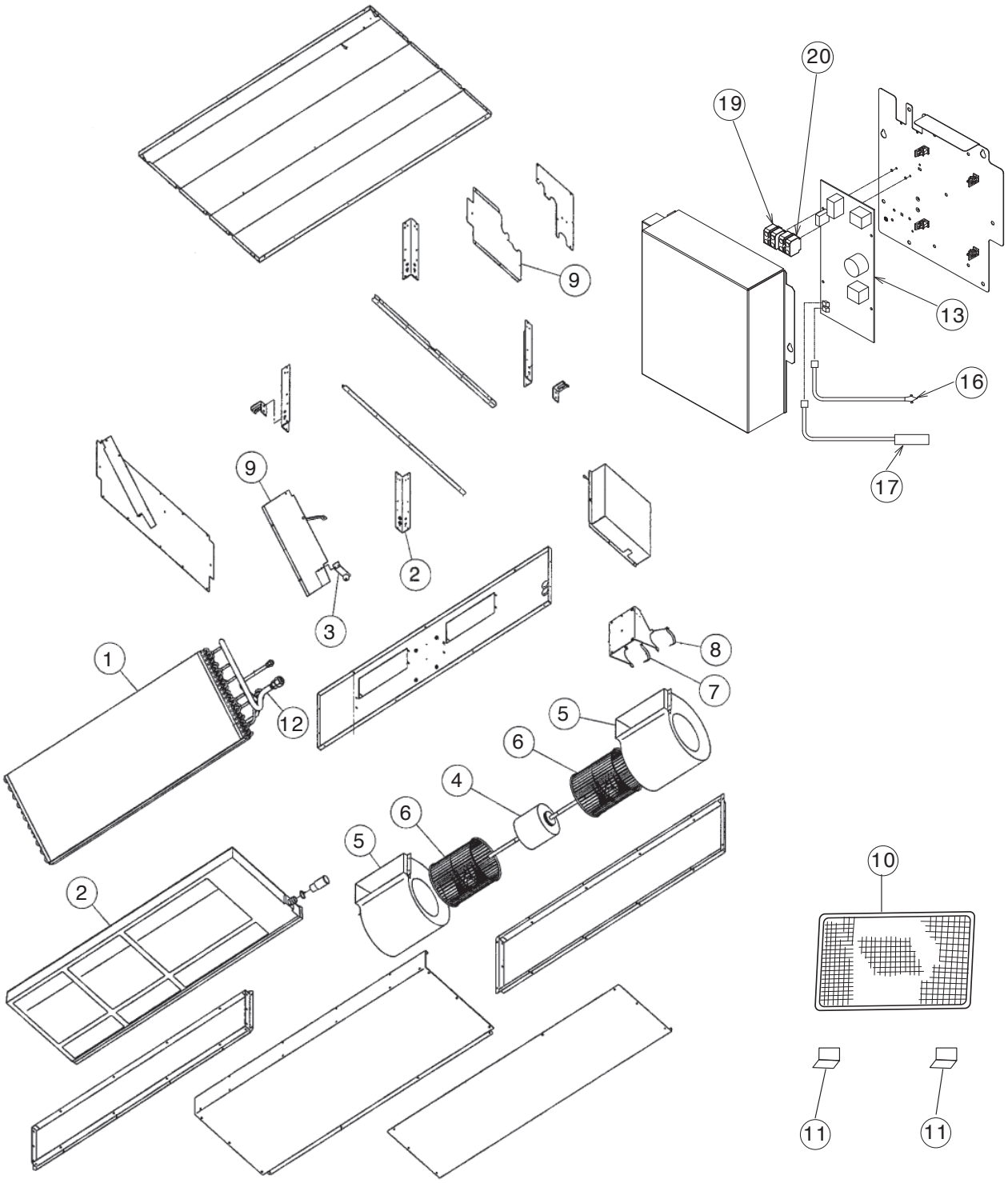

ERSATZTEILE RAD-70PPA

KAUT

NO.	PART N0.		Q'TY / UNIT	PARTS NAME
1	PMRAD-70PPA	R02	1	CYCLE ASSY
2	PMRAD-50DH7	003	1	DRAIN PAN ASSY
3	PMRAD-50DH7	004	1	FLOAT SWITCH
4	PMRAD-50DH7	005	1	FAN MOTOR
5	PMRAD-50DH7	006	2	FAN CASING
6	PMRAD-50DH7	007	2	FAN
7	PMRAD-50DH7	008	1	BAND (L)
8	PMRAD-50DH7	009	1	BAND (R)
9	PMRAD-50DH7	010	1	DRAIN PUMP
10	PMRAD-50DH7	011	1	FILTER
11	PMRAD-50DH7	012	2	FILTER PLATE
12	PMRAD-50DH7	013	1	THERMISTOR SUPPORT
15	PMRAD-70PPA	R01	1	P.W.B MAIN
16	PMRAD-50DH7	014	1	ROOM THERMISTOR
17	PMRAD-50DH7	015	1	THERMISTOR
19	PMRAS-07YHA	011	1	2P TERMINAL WITH FUSE
20	PMRAC-07CV1	R06	1	2P TERMINAL